IBM IEEE CAS/EDS
AI Compute Symposium 2021
October 13-14

Exploring Spiking Neural Network Dynamics with Memristors and R(t) Elements

Ben Etcheverry – Farhana Afrin – Dr. Kurtis Cantley
Boise State University –
Department of Electrical and Computer Engineering

Advancing Capabilities of Spiking Neural Networks in Hardware

BOISE STATE UNIVERSITY

Targeting Hardware SNN's

- We aim to take advantage of the energy efficiency promised by Spiking Hardware Neural Networks
- Memristive crossbar arrays promise synaptic density on the order of the human brain

Novel capabilities

- Moving to a hardware SNN regime requires the development of new device and architectural capabilities
- One such capability is our novel R(t) Element

An example of the type of Spatio-Temporally Distributed Pattern

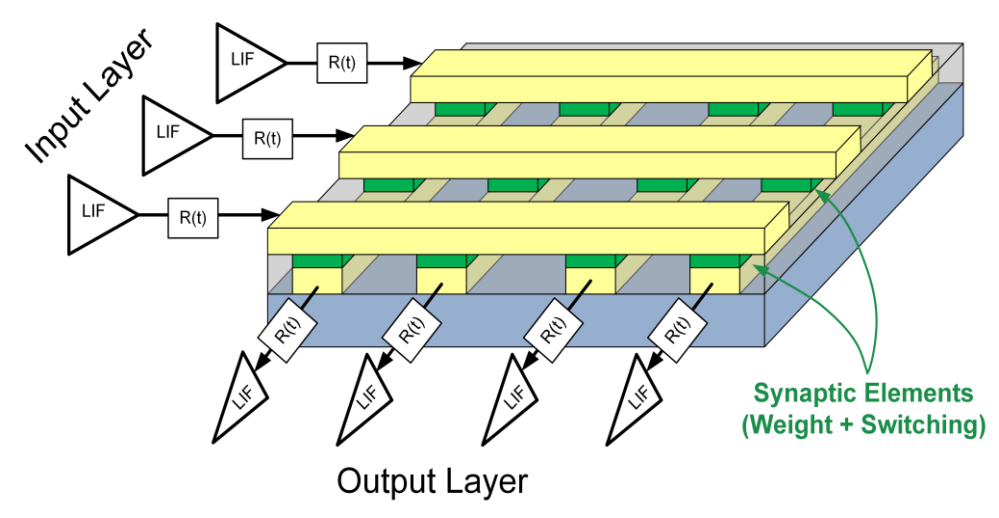

R(t) Element Features and Network Structure

Features:

- Spike shaping – R(t) elements are capable of shaping square pulses to facilitate Spike-Timing Dependent Plasticity in memristive synapses
- Fading memory - Our novel time-varying resistive devices introduce short-term memory information to SNN's to produce temporally complex learning
- Carefully tuned single-layer SNN's employing R(t)'s have been trained to recognize Spatio-Temporal Patterns

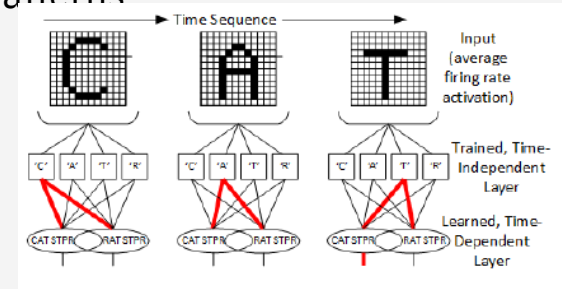

An example of the type of Spatio-Temporally Distributed Pattern R(t) Networks are intended to learn

Network Structure:

- R(t)'s are connected to the input and output of each neuron
- Because the synaptic density is much greater than neuron density, having devices on the order of neuron density facilitate STDP aids in scaling

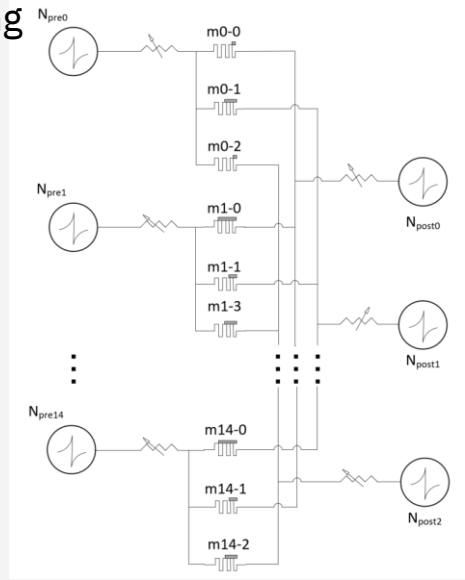

Network Structure Employing R(t) Elements

R(t) Element Functionality and Circuit Implementation

Functionality:

- Device resistance trends toward minimum in the presence of stimulation then decays back to high resistance state

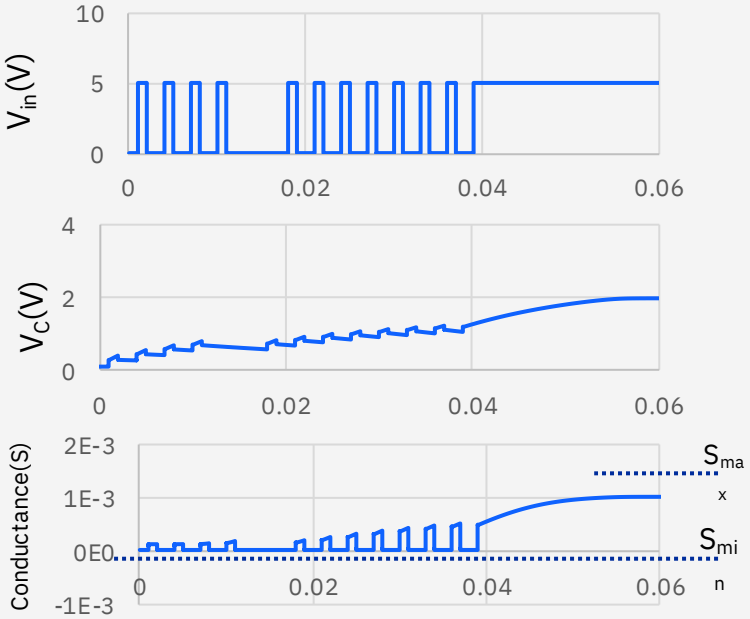

R(t) Element Response to Pulse Train Input

Circuit Implementation:

- Input current mirror structure charges capacitor
- MR1 has a small channel conductance and MR2 has a large channel conductance
- As C charges, MRt becomes more conductive and shunts MR1 out of circuit
- Vth controls the rate of charging and Vlk controls the rate of leakage current through M6

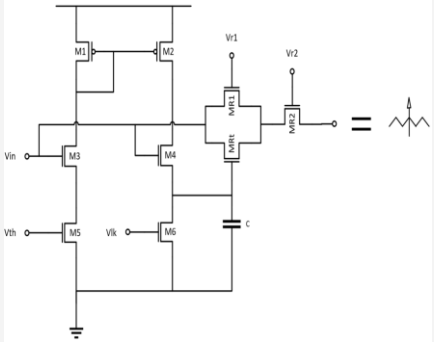

Circuit implementation of an R(t) Element

Features of SNN's Employing R(t) Elements

R(t) Features:

- Shaping of square pulses facilitates both pair-based and spike-triplet Spike-Timing Dependent Plasticity (STDP)
- The introduction of fading memory allows for recognition of patterns distributed both across neural population as well as in time

R(t) Hyper-Parameters

- Leakage rate sets timescale of fading memory
- Vr1 parameter sets the device starting resistance and controls the average post-synaptic firing rate

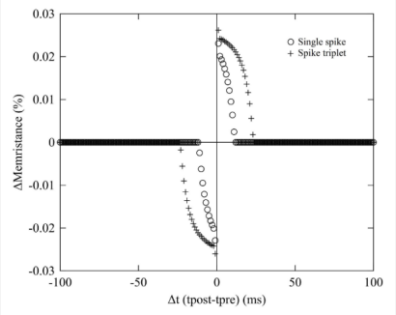

Spike Pair and Spike-Triplet based STDP curve with R(t) Elements [1]

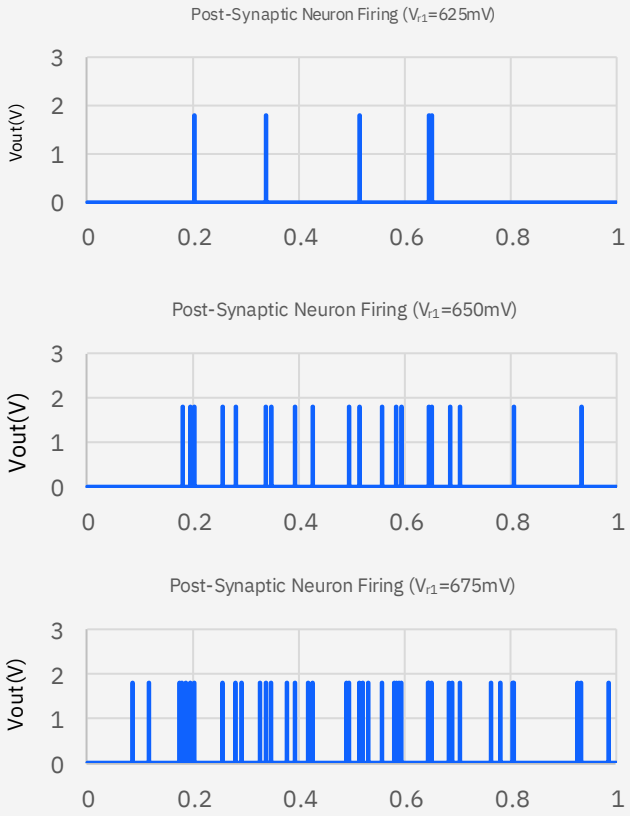

R(t) Hyper-parameter Vr1 controls average post-synaptic firing rate

Networkcraft Toolchain

Allows for generation of arbitrary network structures

Arbitrary pattern generator embeds Spatio-Temporally distributed patterns in noise

Network netlists may be simulated then integrated into a VLSI design for fabrication

Analysis tools plot STDP curves, calculate spike population statistics, and more

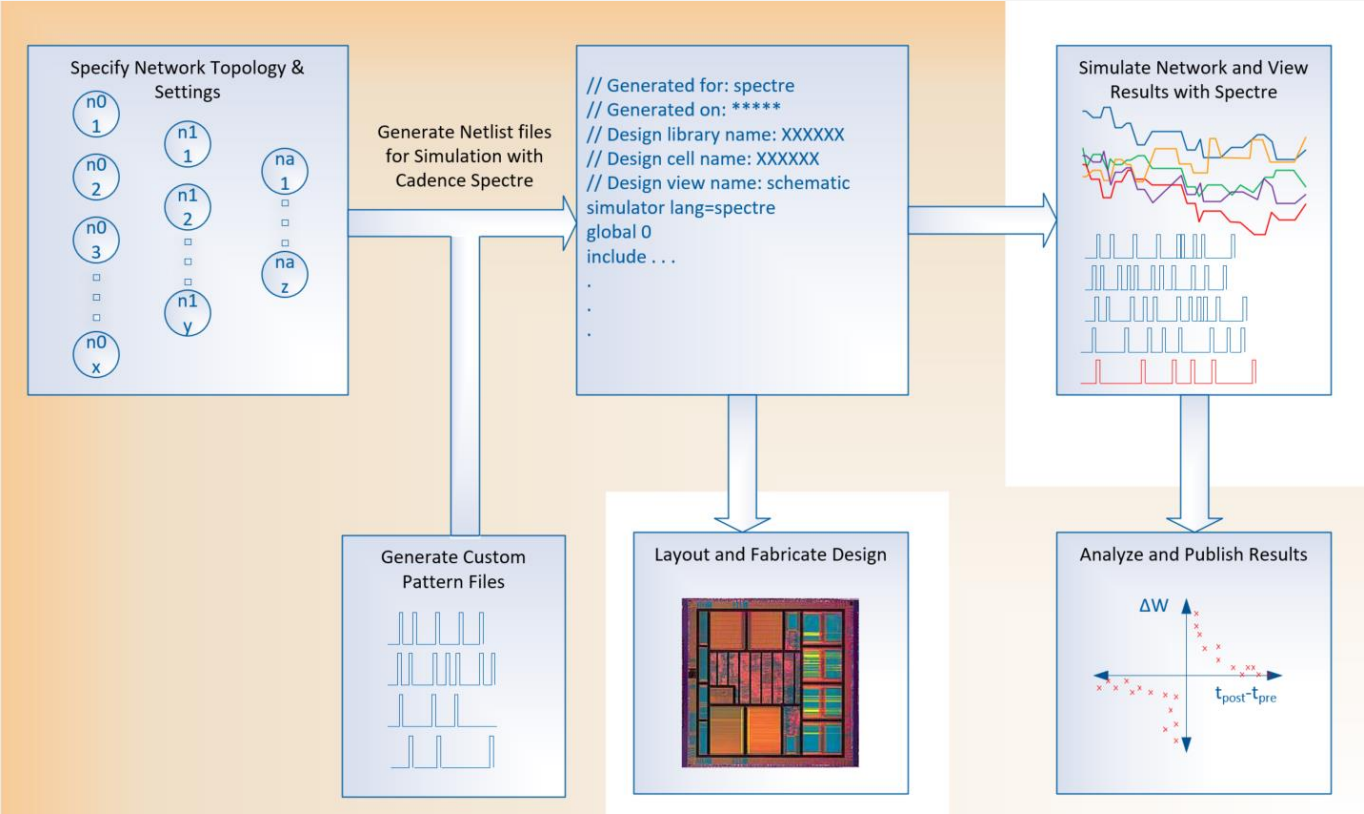

References:

[1] R. C. Ivans, S. Member, S. G. Dahl, S. Member, and K. D. Cantley, “A Model for R(t) Elements and R(t)-Based Spike-Timing-Dependent Plasticity With Basic Circuit Examples,” *IEEE Trans. Neural Networks Learn. Syst.*, pp. 1–11, 2019.